INSTRUCTIONS
RLV-S

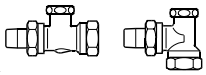

013R9266

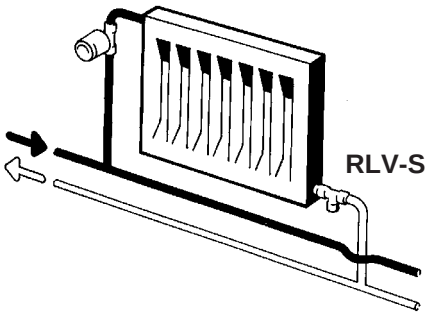

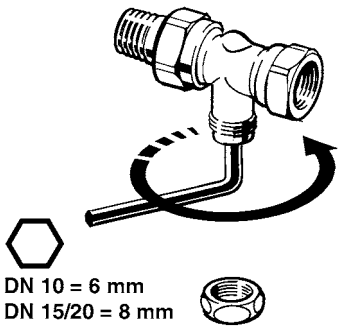

1)

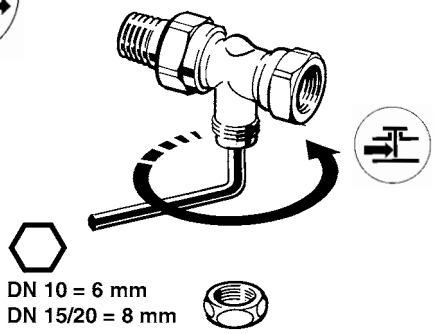
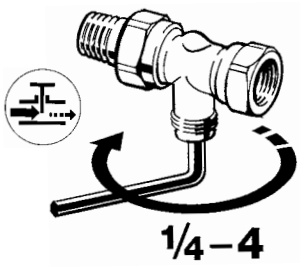
2)