Tap Active L swivel spout CHR/OS | 115.0653.378

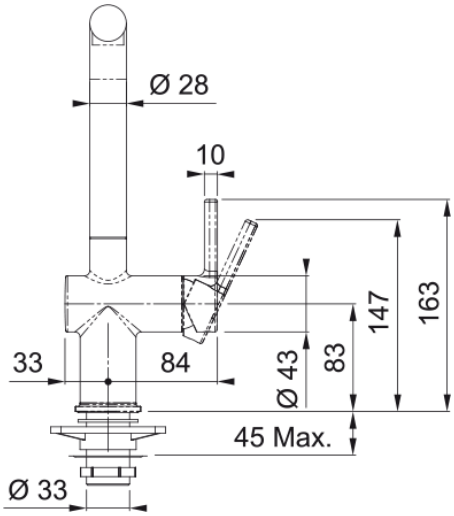

Technical Data