31 574 DL1 **K700U STAINLESS STEEL SINK**

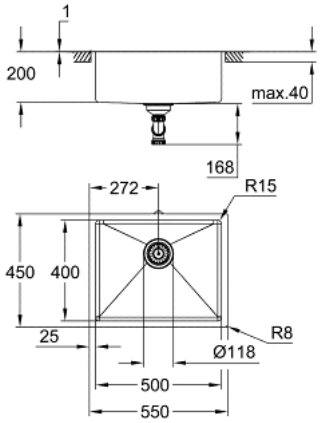

TOOTE KIRJELDUS

- Värvus: brushed warm sunset
- model: K700U 60-S 54.4/44.4 1.0
- mounting type: undermount, top mount or flush mount
- material: stainless steel AISI 304 (V2A)
- material thickness: 1 mm
- GROHE Long-Life Shine finish
- finish: satin finish
- GROHE Whisper
- min. cabinet size: 600 mm
- dimensions: 550 x 450 mm
- sound level in standby 44 dB(A)
- GROHE FastFixation installation system
- cut-out (undermount): 502 x 402 mm (R16)
- cut-out (top mount): 535 x 435 mm
- cut-out (flush mount): 535 x 435 mm (R3) (top step outer size: -551 x 451 -R8 deep -3.5 mm)
- drainer: Ø 3.5"/90 mm basket strainer waste
- accessories included: waste kit, basket strainer waste, mounting set
- amount of fasteners included (top mount): 8
- amount of fasteners included (undermount): 8