Basic set for single lever basin mixer for concealed installation wall-mounted
Surfaces: **n.a.** Article Number: **13622180**

Description

product features

- variable positioning of the mixer system, can be left or right of the spout
- connection dimension: DN15

Product image
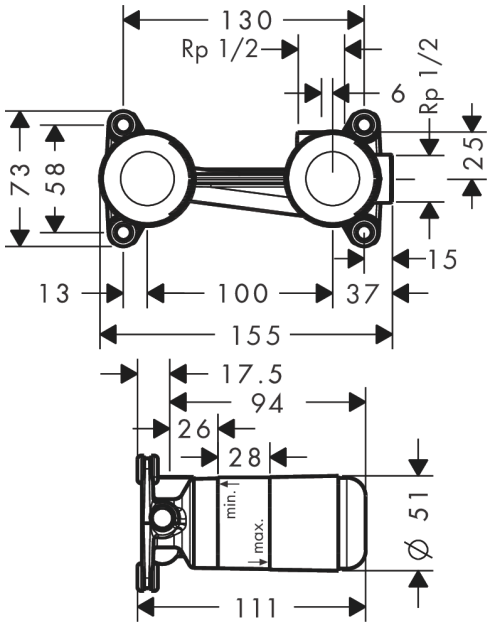
Scale drawing