hansgrohe

Novus
Single lever bath mixer for exposed installation
Surfaces: **Chrome** Article Number: **71040000**

Description

product features

- projection 192 mm
- connection type: s-shaped connections
- centre distance: 150 ± 12 mm
- spray type mixer: normal spray
- flow rate for bath spout at 3 bar: 19 l/min
- flow rate of hand shower at 3 bar: 16 l/min
- ceramic cartridge
- min. operating pressure: 1 bar
- max. operating pressure: 10 bar
- temperature limitation adjustable
- diverter with automatic resetting
- non-return valve
- with silencer
- suitable for continous flow water heaters
- connection dimension: DN15

Technology

Product image

Scale drawing

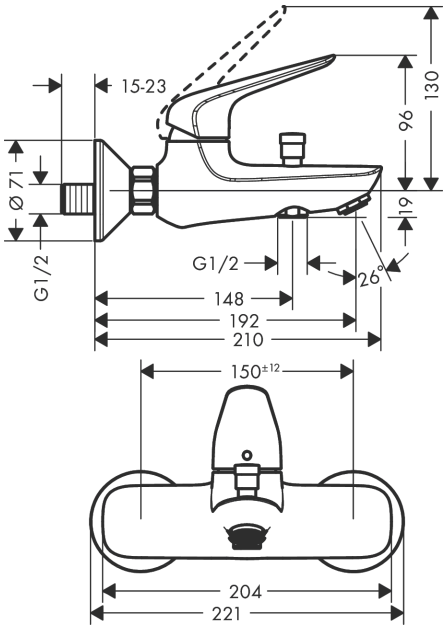

Novus
Single lever bath mixer for exposed installation
Surfaces: **Chrome** Article Number: **71040000**

Flowchart

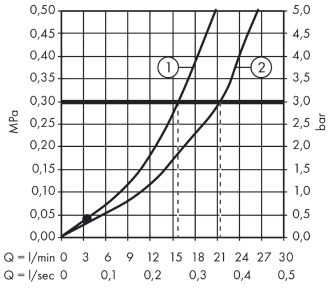

① Shower outlet with 1B-resistance
② Tub outlet