Focus M42
Single lever kitchen mixer 180, pull-out spray, 2jet
Surfaces: **Chrome** Article Number: **71801000**

Description

product features

- ComfortZone 180
- swivel range 360°
- laminar spray and shower spray
- lockable shower spray, spray returns through pressing spray diverter and spray returns automatically through handle closing
- MagFit magnetic shower support
- quick connect hose
- connection dimension: DN15
- maximum flow rate at 3 bar: 8 l/min
- ceramic cartridge
- connection type: G ⅜ connections
- integrated non-return valve
- suitable for continuous flow water heaters

Technology

Product image
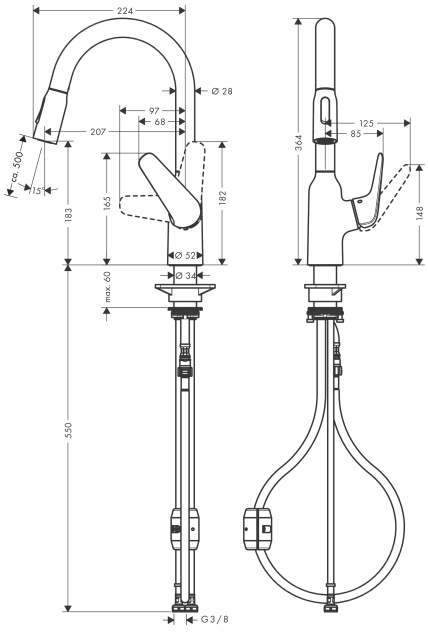
Scale drawing